Demodaten
Me-go GmbH

Messtechnik - einfach - gut - optisch

Dienstleistung Schulung Vertrieb Beratung

Messung für Firma Me-go GmbH

Me-go GmbH

Am Martinsberg 30

91567 Herrieden
Germany
www.me-go.de

Tel.: +49 (0) 162 799 8130
Tel.: +49 (0) 162 722 4970
E-Mail: kontakt@me-go.de

Messung für Firma Me-go GmbH

Deckblatt 1
Inhaltsverzeichnis 2
Door Slam 3
Verwendetes Messsystem - ARAMIS SRX 4
Define Components 5
Aligment to CAD 6
Displacement Y-Direction 7
Displacement Y-Direction and velocity 8
Video - Displacement Y-Direction with 3D view and animated mesh 9
Displacement Y-Direction - vibration of the door panel 10
Displacement Z-Direction and velocity 11
static distance seal - chassis by closed door 12
static distance seal - chassis by closed door 13
static distance seal - chassis by closed door 14
Me-go Ansprechpartner 15
Me-go 16

Door Slam

273 ms

Geometriereferenz: 273 ms

RBMC by chassis + 3-point alignment

Inspector:	Me-go GmbH
Date:	09.09.2017
Location:	Herrieden
Company:	Me-go GmbH
Department:	Testing
System:	ARAMIS SRX
Project:	Door Slam
Version:	ARAMIS Software 2017
Part preparation:	Measuring Points
Illumination:	Tracking Spots
Material:	Car
Test conditions:	Production
Test speed:	1000Hz

Verwendetes Messsystem: ARAMIS SRX 8 GB

ARAMIS SRX ist ein hochauflösendes 3D-Kamerasystem zur Durchführung von vollflächigen und punktbasierten Messungen. Bis zu 2000 Bilder pro Sekunde, gepaart mit hoher Stabilität, Prozesssicherheit und Benutzerfreundlichkeit machen ARAMIS SRX zu einem idealen Messsystem für High-End-Anwendungen im industriellen Umfeld.

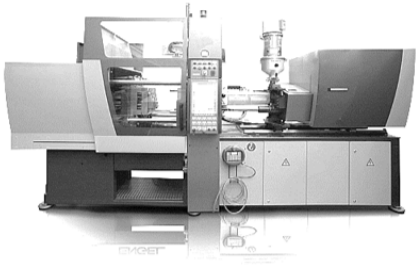

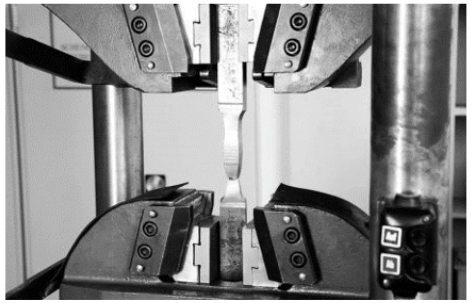

Define Components

273 ms

Geometriereferenz: 273 ms

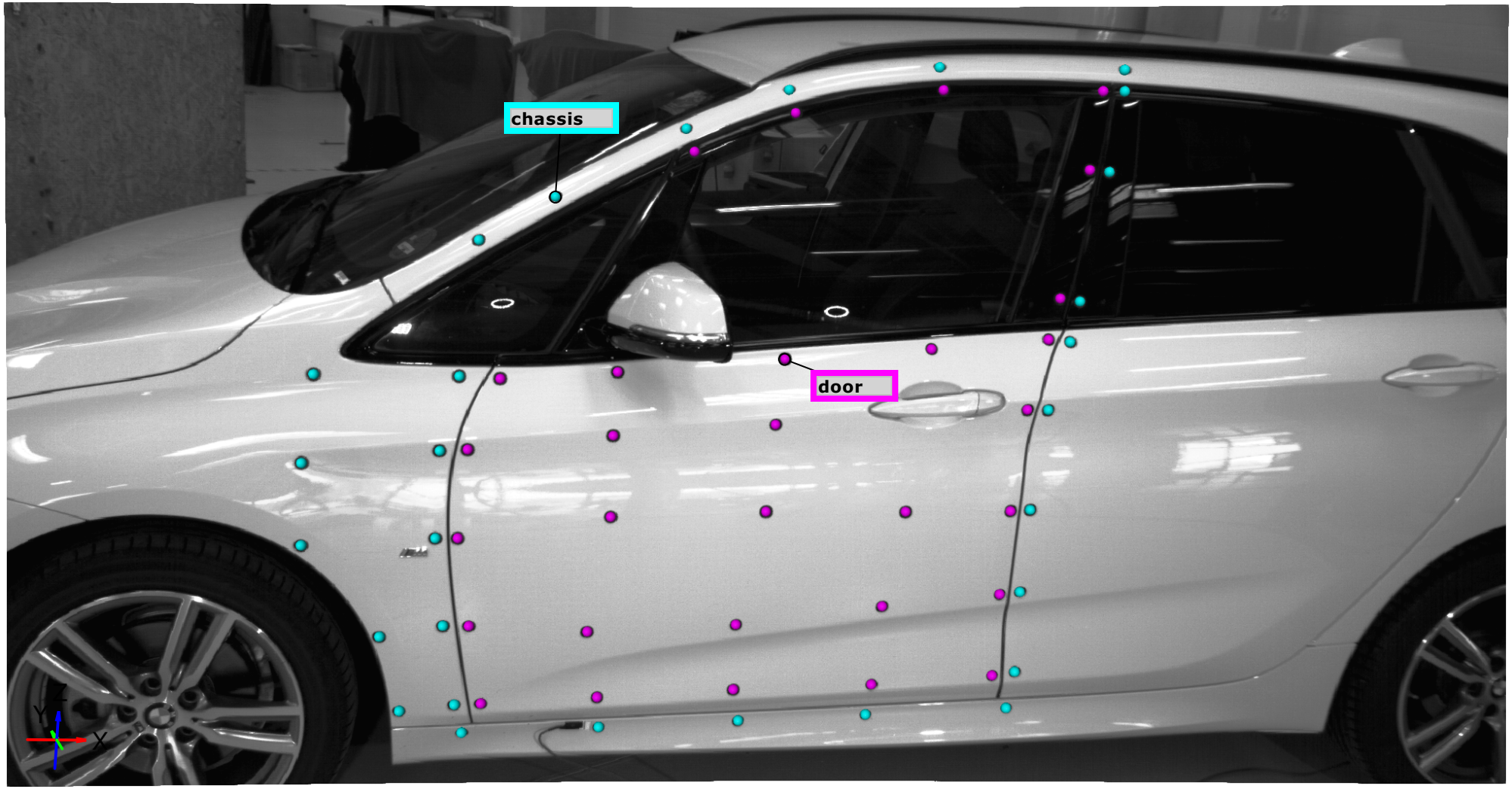

RBMC by chassis + 3-point alignment

Aligment to CAD

273 ms

Geometriereferenz: 273 ms

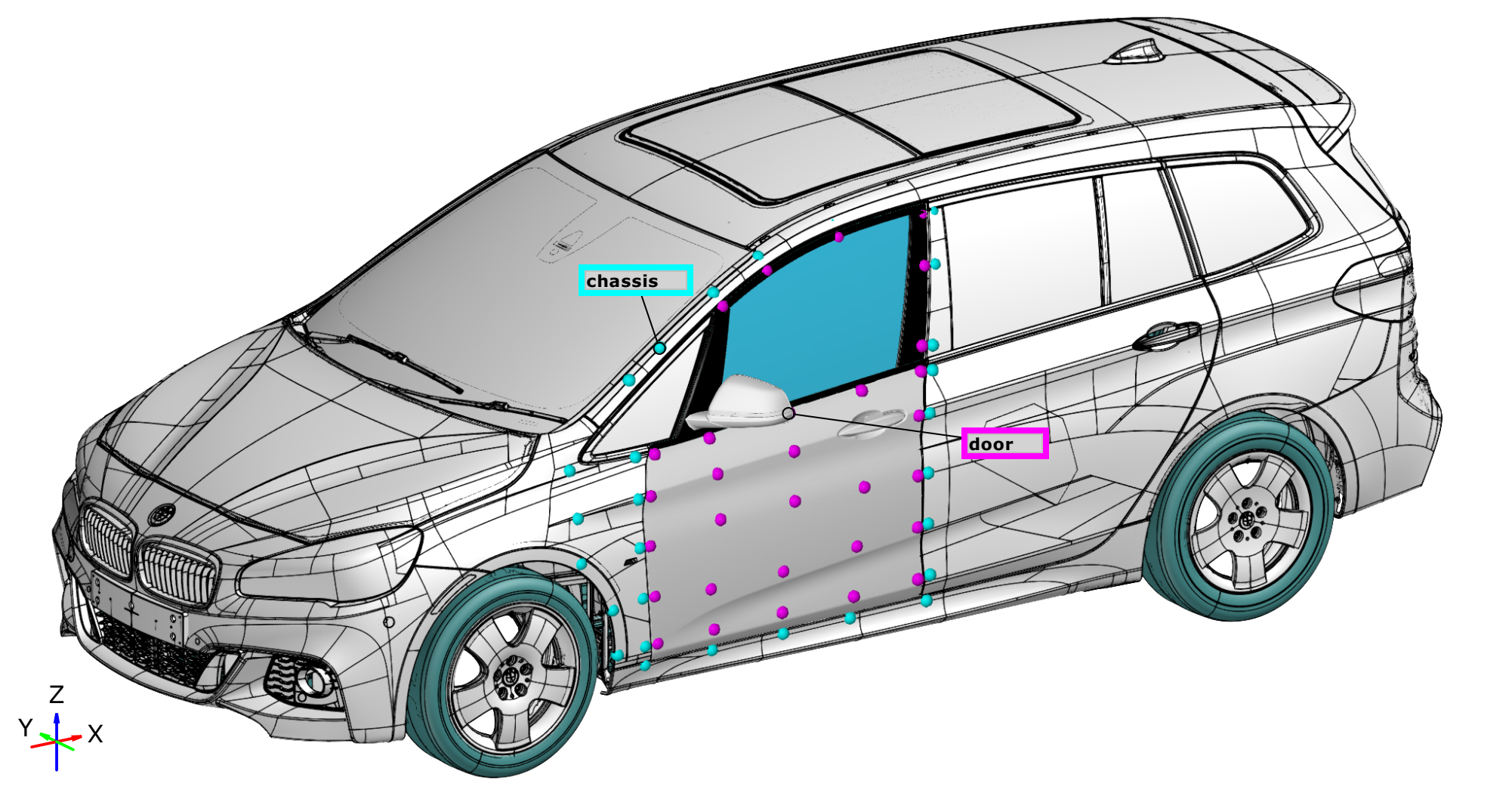

RBMC by chassis + 3-point alignment

Displacement Y-Direction

15 ms

Geometriereferenz: 273 ms

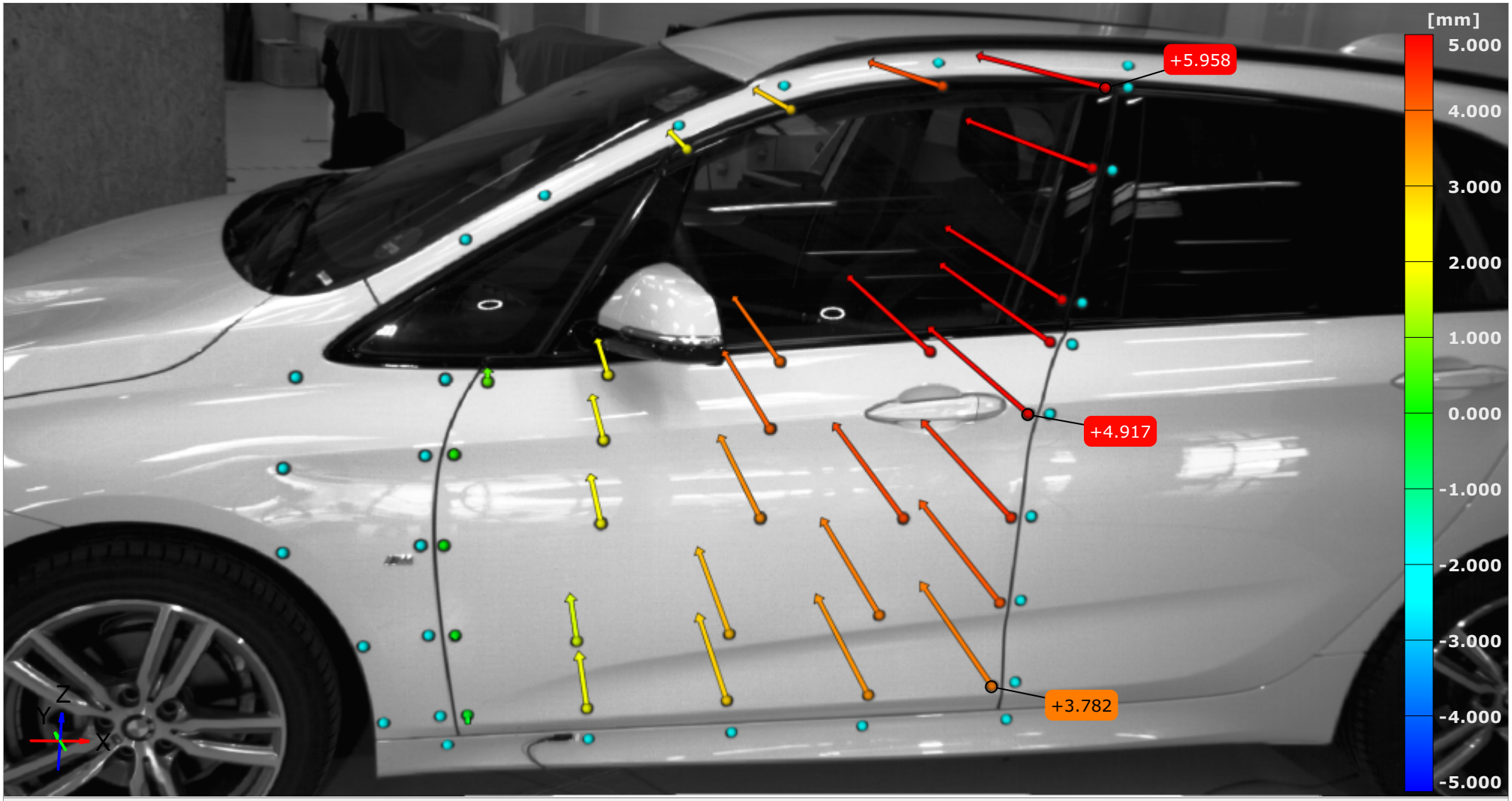

RBMC by chassis + 3-point alignment

Displacement Y-Direction and velocity

71 ms

Geometriereferenz: 273 ms

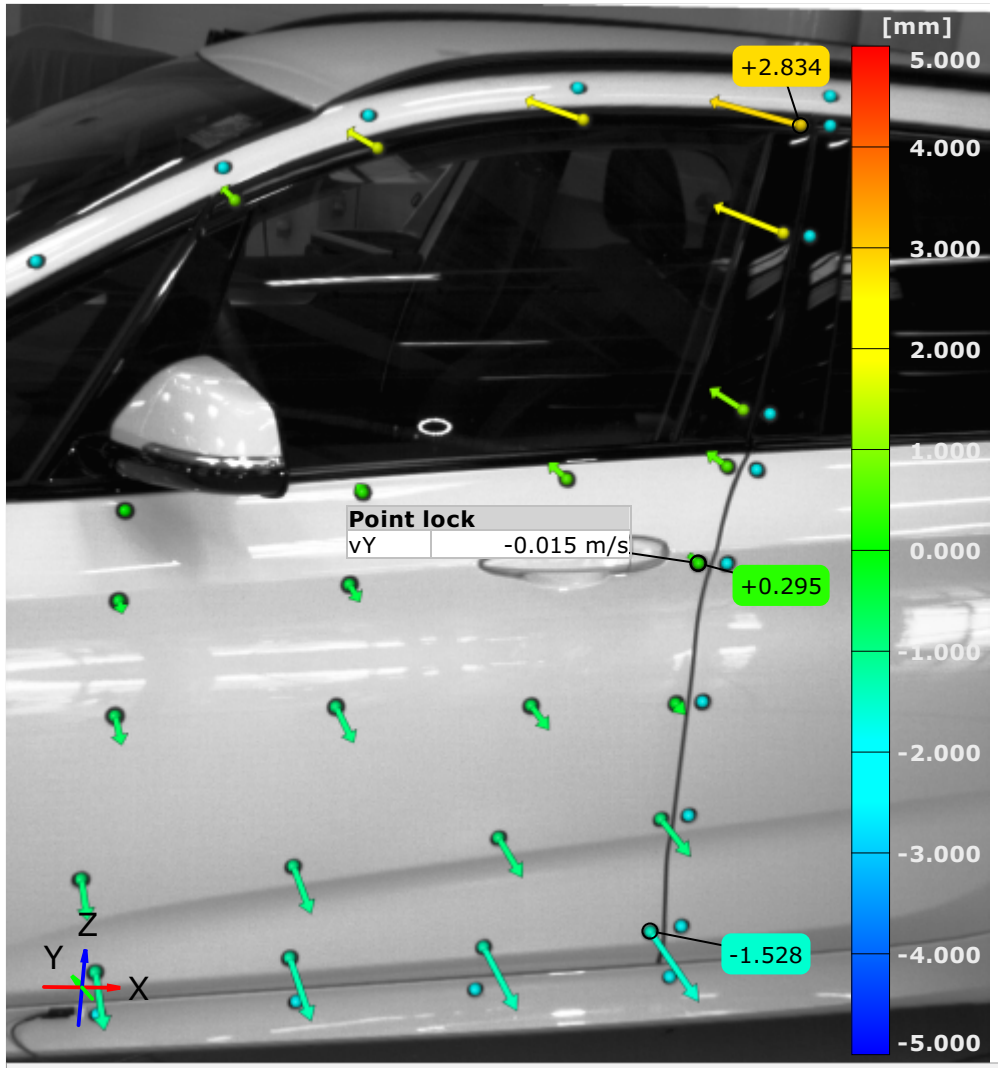

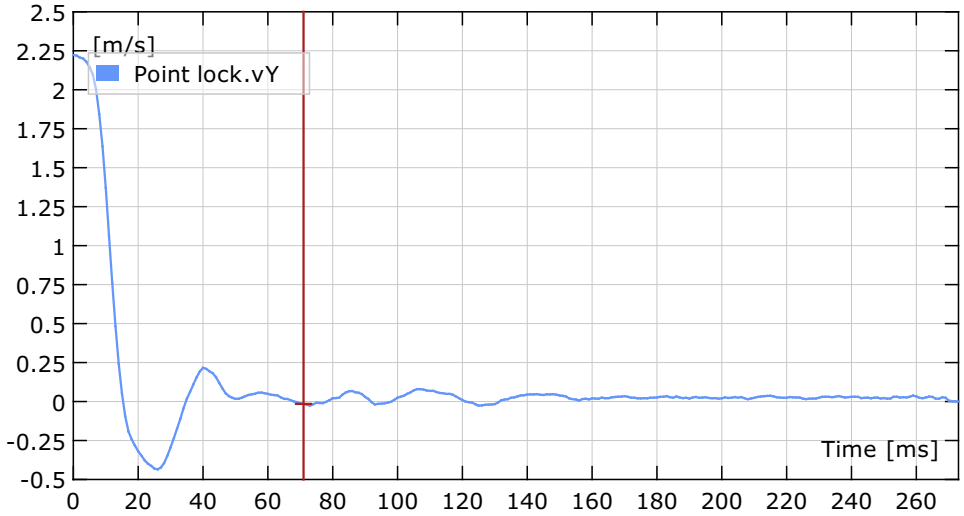

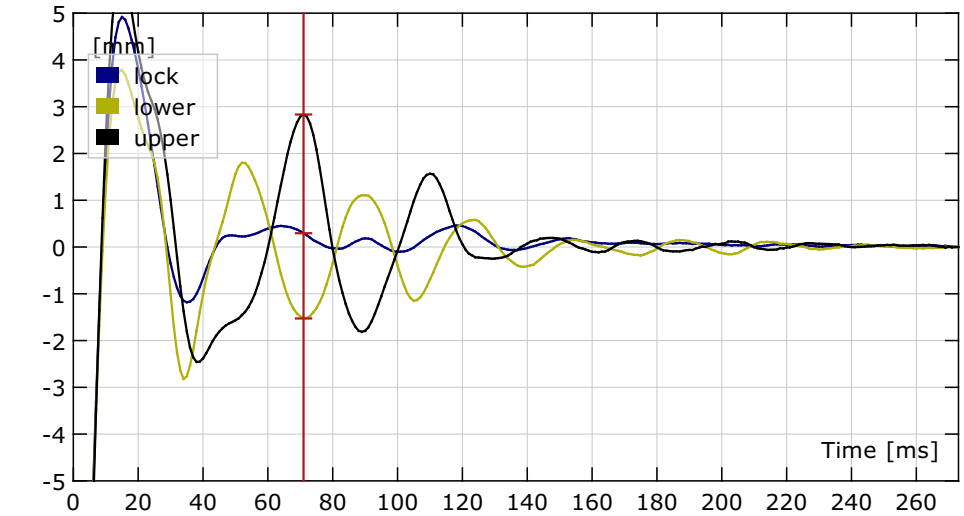

RBMC by chassis + 3-point alignment

Video - Displacement Y-Direction with 3D view and animated mesh

18 ms Geometriereferenz: 273 ms

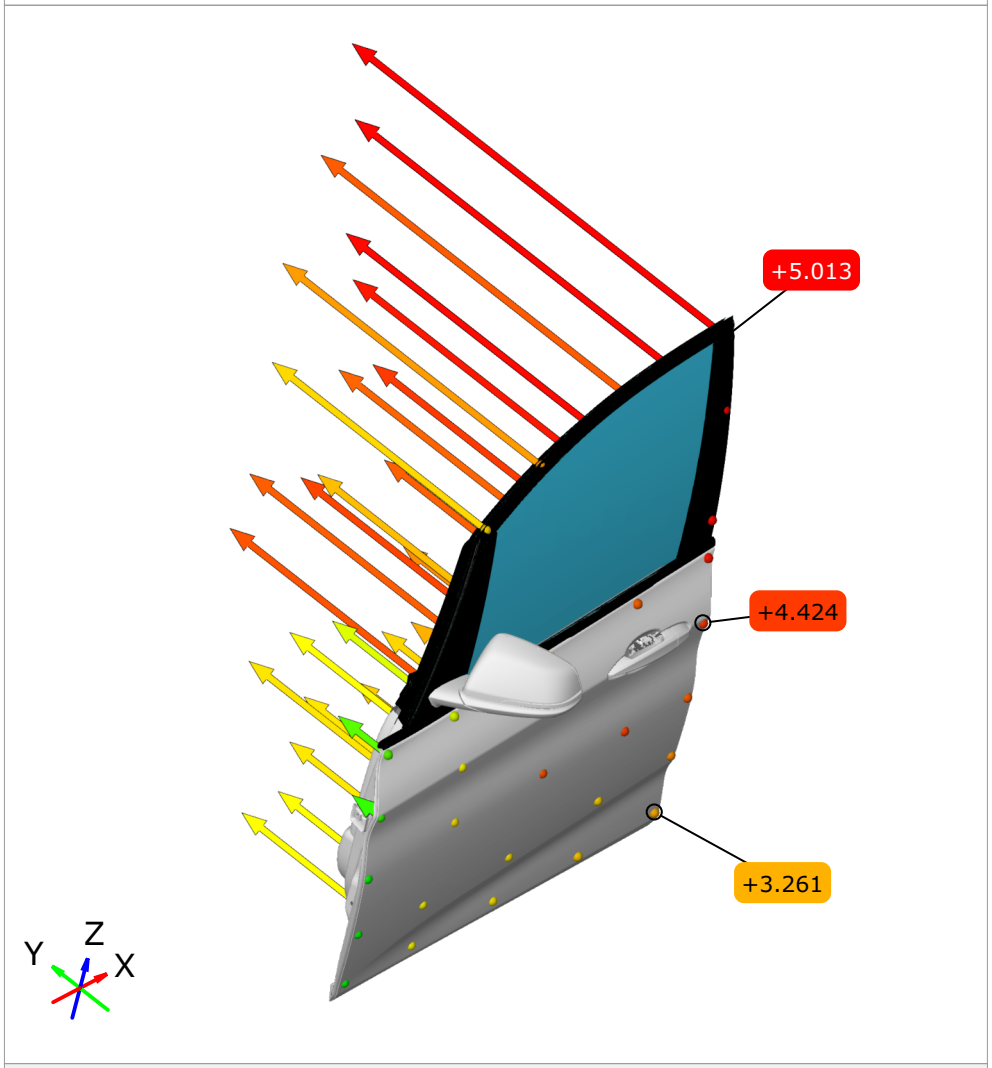

RBMC by chassis + 3-point alignment

18 ms Geometriereferenz: 273 ms

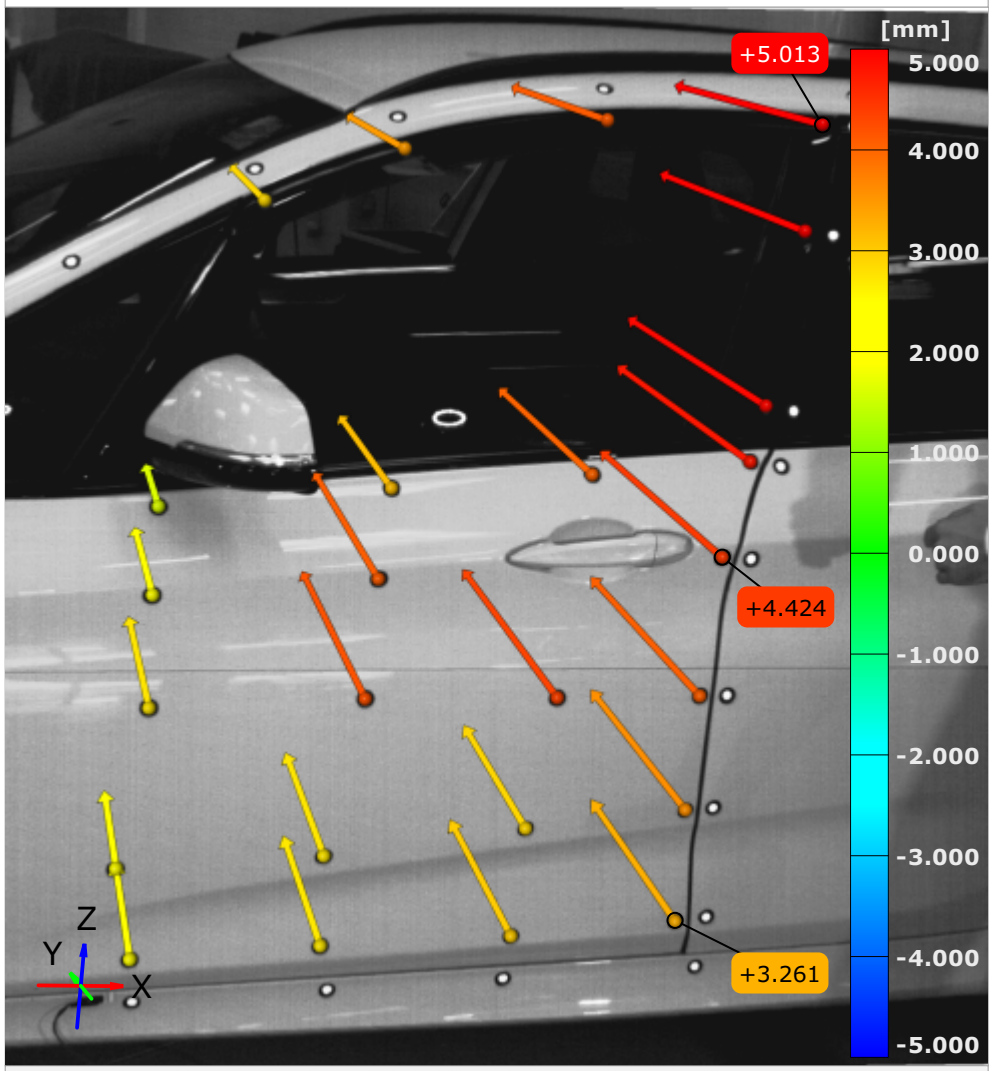

RBMC by chassis + 3-point alignment

Displacement Y-Direction - vibration of the door panel

15 ms

Geometriereferenz: 273 ms

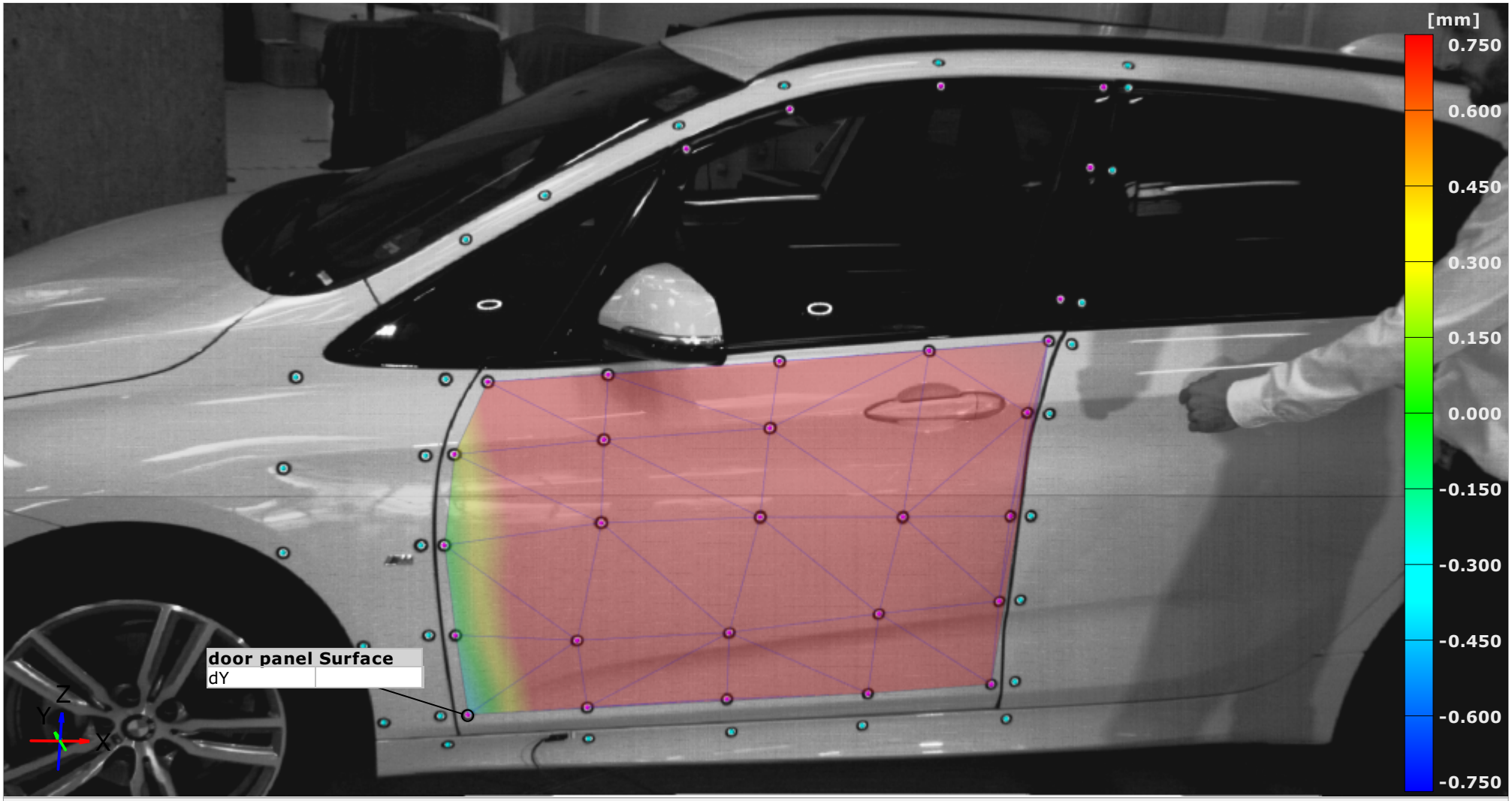

RBMC by chassis + 3-point alignment

Displacement Z-Direction and velocity

71 ms

Geometriereferenz: 273 ms

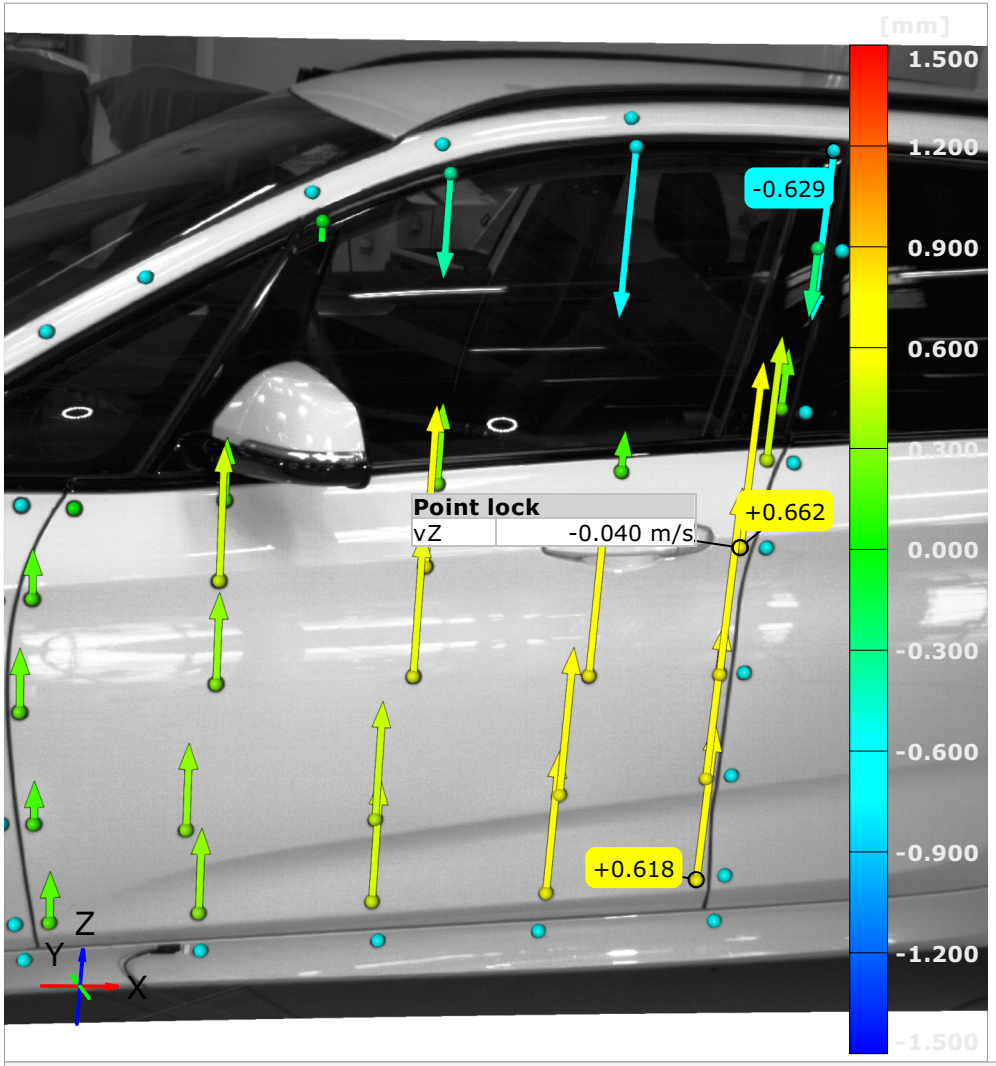

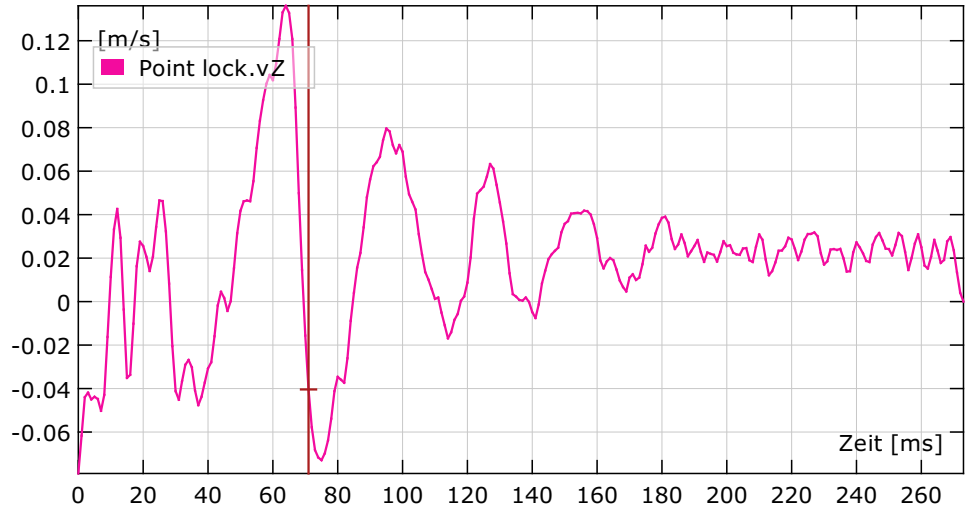

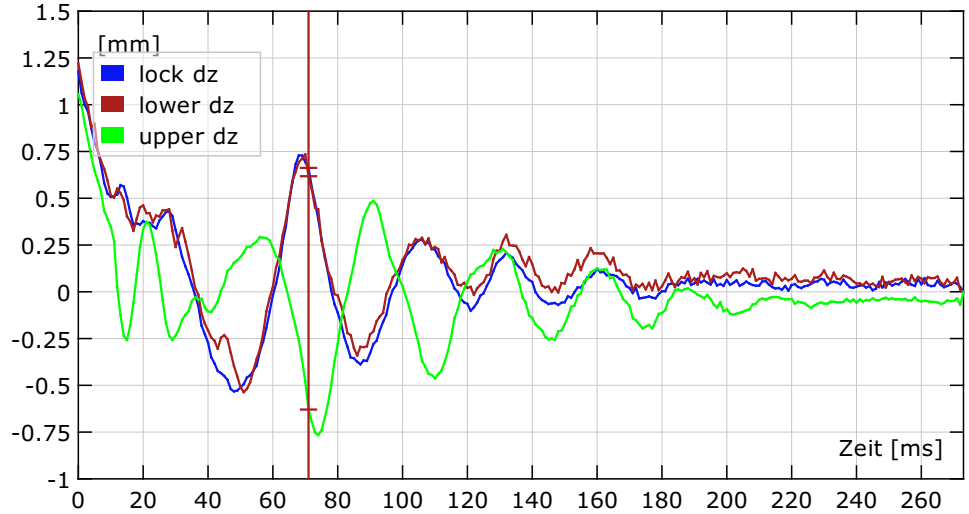

RBMC by chassis + 3-point alignment

static distance seal - chassis by closed door

64 ms Geometriereferenz: 273 ms

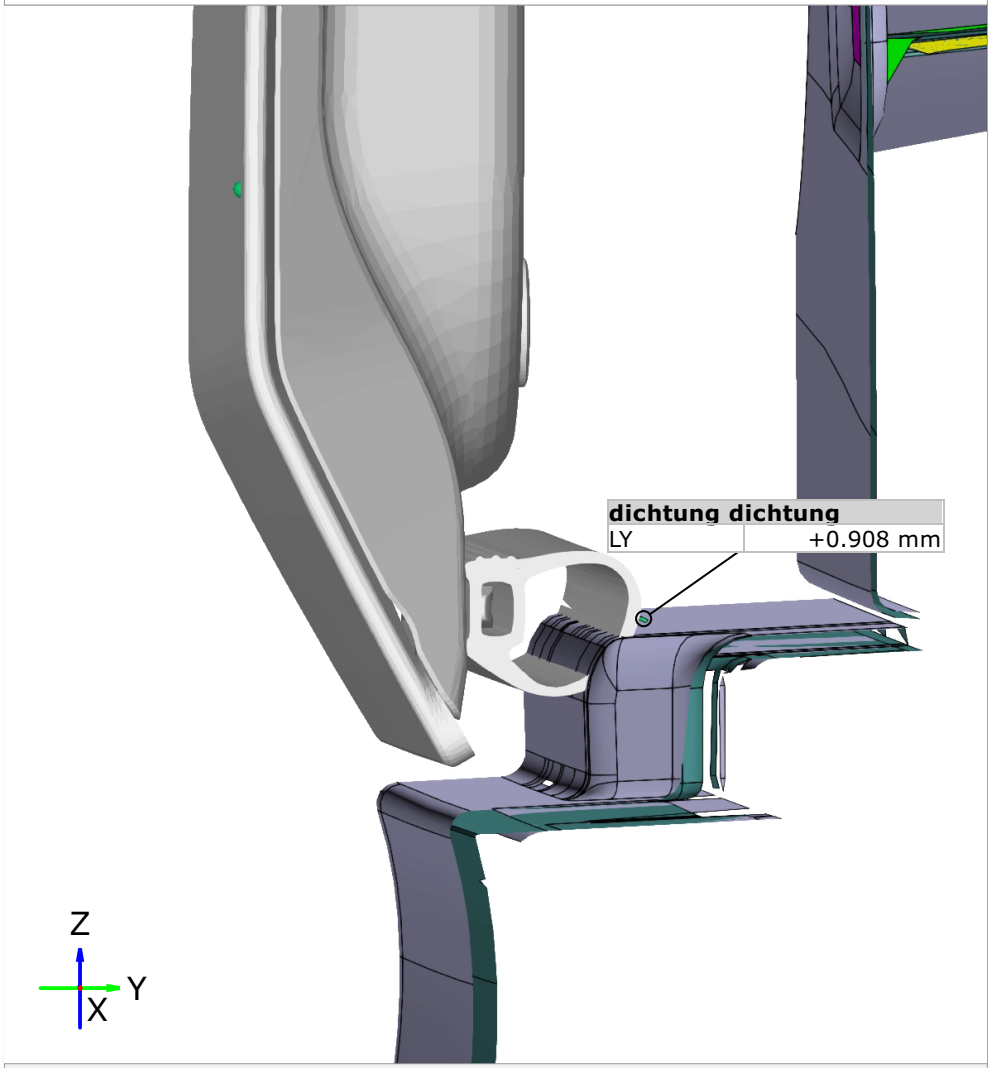

RBMC by chassis + 3-point alignment

64 ms Geometriereferenz: 273 ms

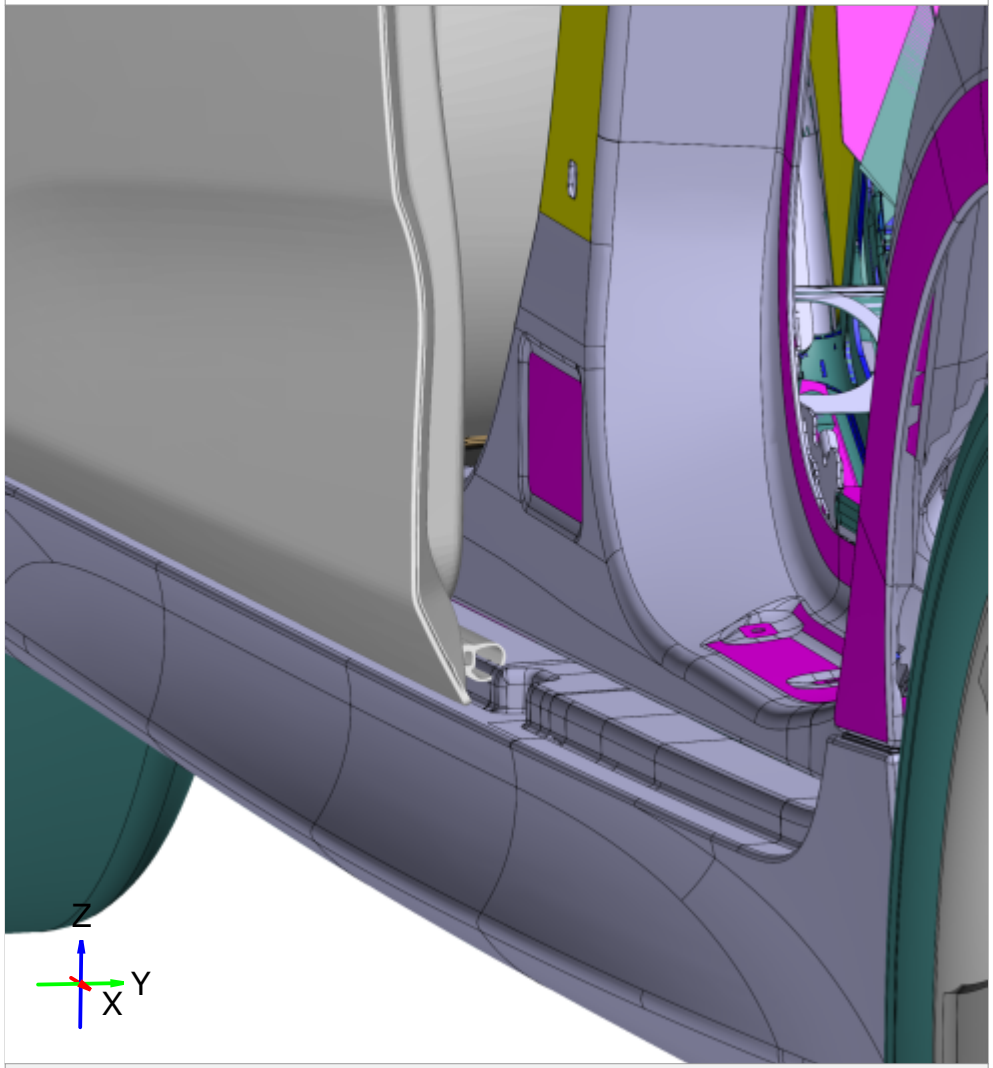

RBMC by chassis + 3-point alignment

static distance seal - chassis by closed door

64 ms Geometriereferenz: 273 ms

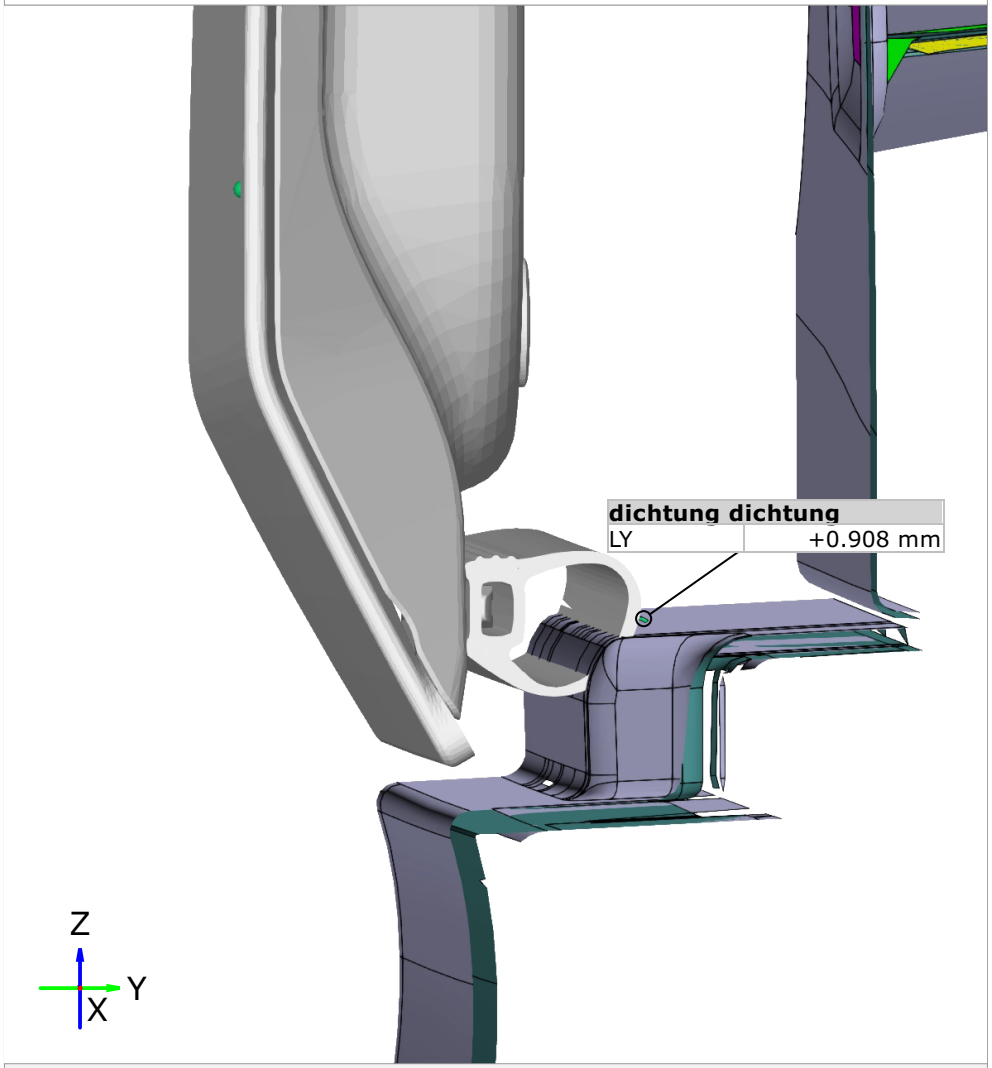

RBMC by chassis + 3-point alignment

64 ms Geometriereferenz: 273 ms

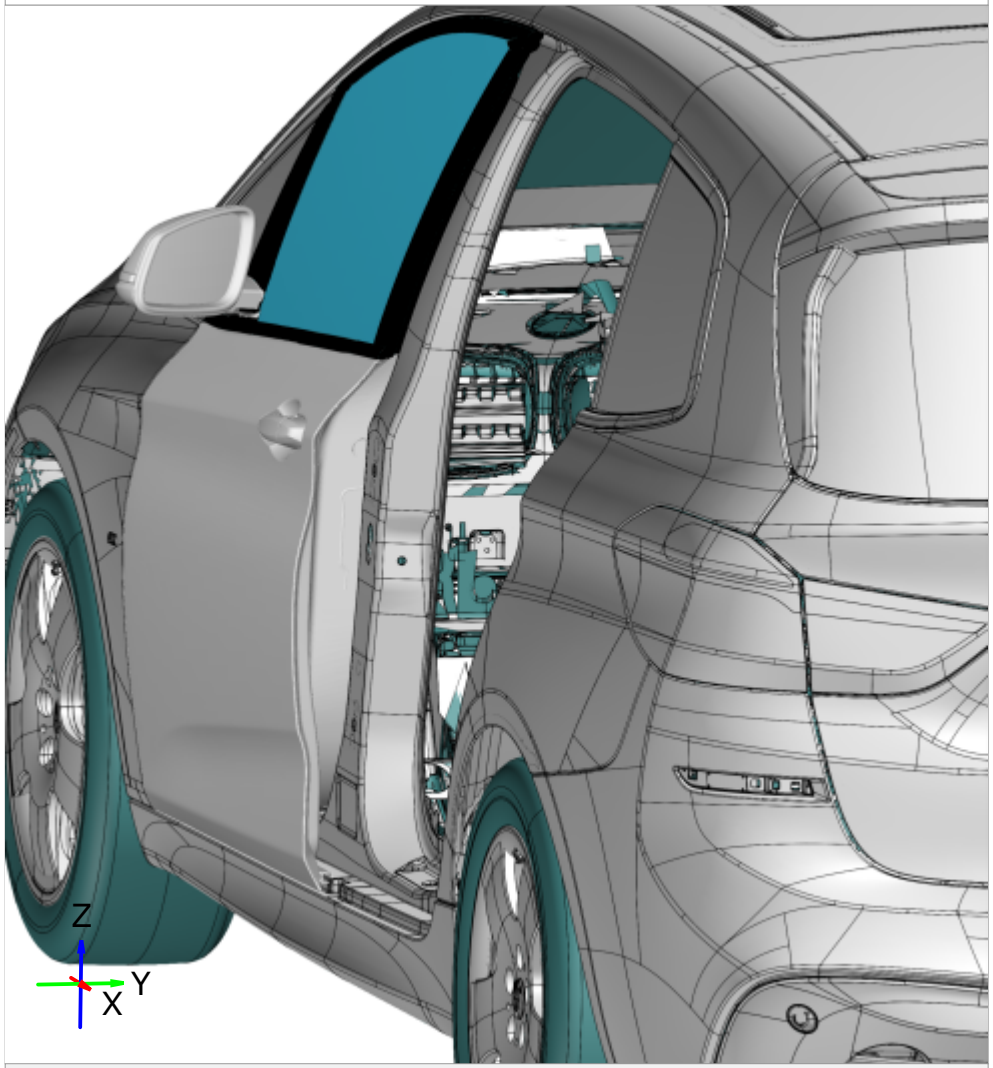

RBMC by chassis + 3-point alignment

static distance seal - chassis by closed door

160 ms

Geometriereferenz: 273 ms

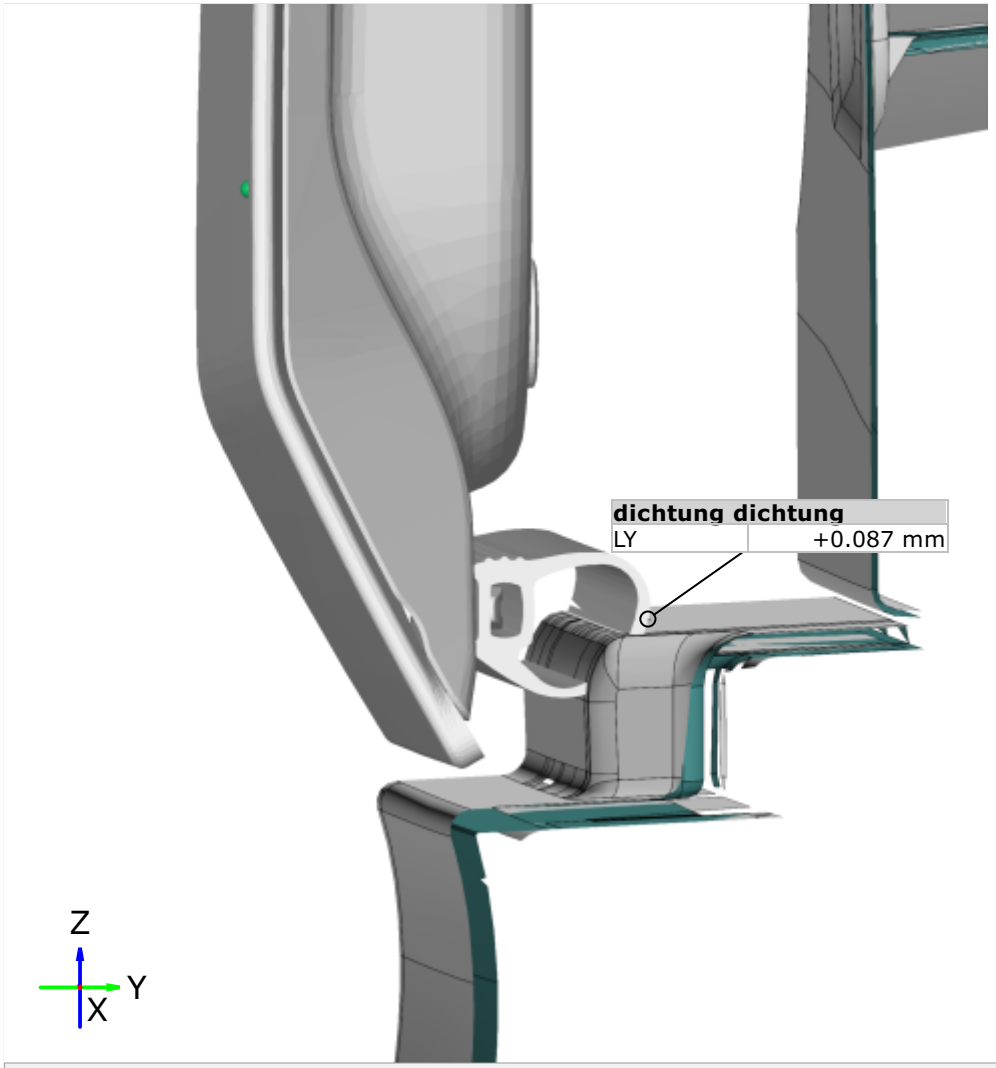

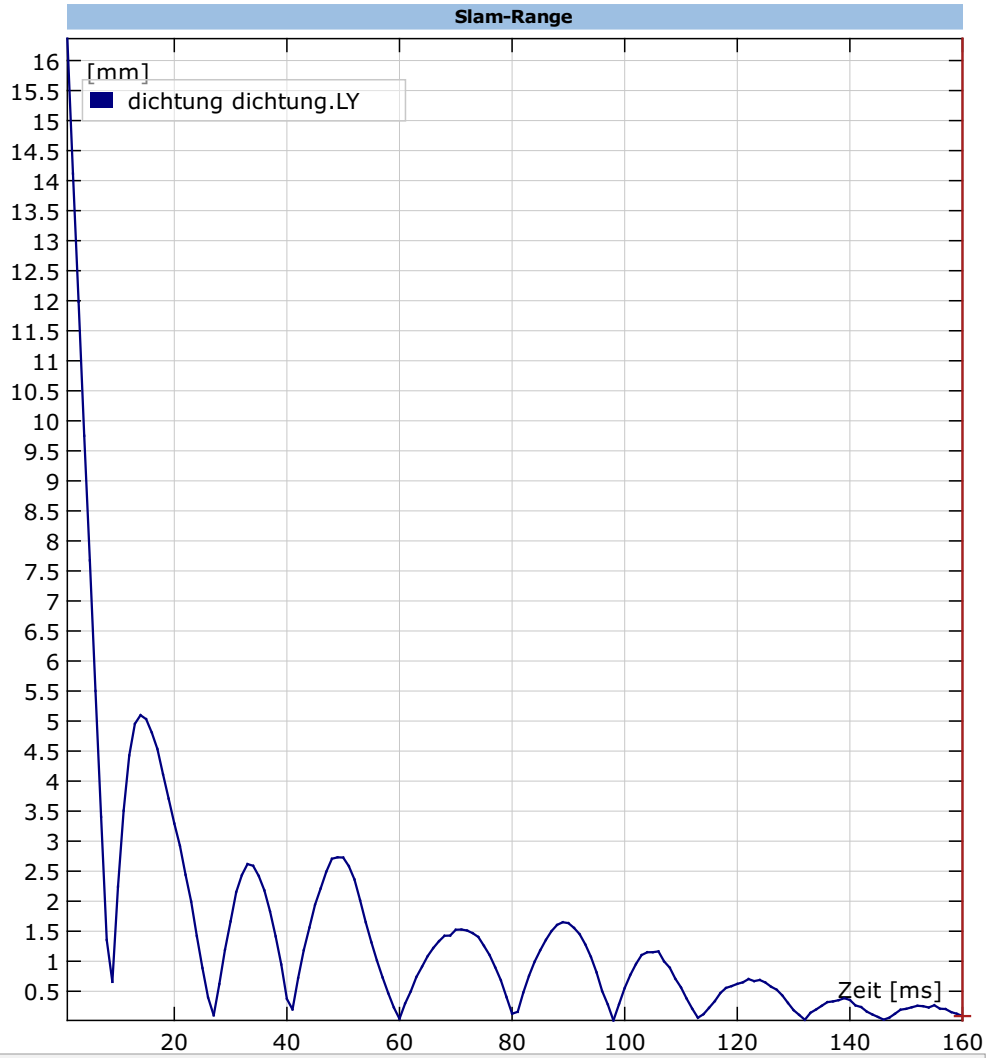

RBMC by chassis + 3-point alignment

Ihre direkten Ansprechpartner sind:

Geschäftsführer:

Sebastian Sauber
Dipl.-Ing., MBA
+49 (0) 162 799 8130

E-Mail: sebastian.sauber@me-go.de

Geschäftsführer:

Thomas Lind
Dipl.-Ing., M.Sc.
+49 (0) 162 722 4970

E-Mail: thomas.lind@me-go.de

Demodaten
Me-go GmbH

Messtechnik
Me-go
einfach - gut - optisch

www.me-go.de